# TR-WM03-B-IN 3-inch Fixed Dome Mount

## Specifications

| Bracket | TR-WM03-B-IN |
|---|---|
| Application | Wall installation for IPC32X and IPC361X series |
| Dimensions | 126mmx126mmx188mm (5” x5” x7.4”) |
| Weight | 0.5kg(1.1lb) |
| Material | Aluminum alloy |

## Dimensions

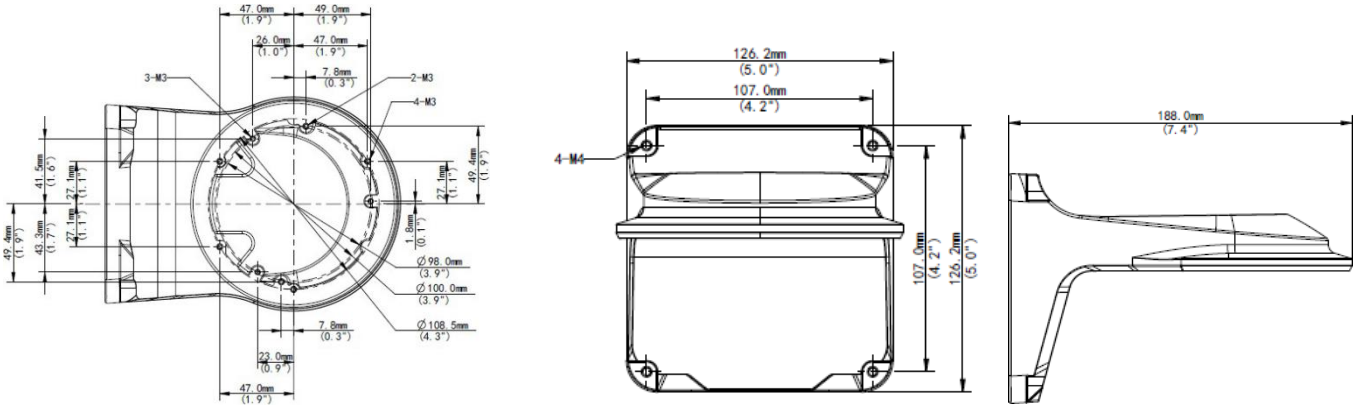


**“Your Reliable Integrated Video Surveillance Solutions Provider”**

**Shenzhen Starlink Technology Co.,Ltd**
1811, Block A, Zhantao Technology Building, Longhua District, Shenzhen, P.R.China 518131
Email: info@qixingtechnology.com; qixing@qixingtechnology.com
https://www.qixingtechnology.com
©2009-2018 Shenzhen Starlink Technology Co.,Ltd. All rights reserved.

*Product specifications and availability are subject to change without notice.